3\3 (5) S-2011

Faculty of Engineering & Technology

Third Semester B.E. (C.S.E.) (New) Examination

DIGITAL CIRCUITS AND FUNDAMENTAL OF MICROPROCESSOR

Sections—A & B

Time—Three Hours] [Maximum Marks—80

INSTRUCTIONS TO CANDIDATES

(1) All questions carry marks as indicated.

(2) Answer any **THREE** questions from Section A and any **THREE** questions from Section B.

(3) Due credit will be given to neatness and adequate dimensions.

(4) Assume suitable data wherever necessary.

(5) Illustrate your answers wherever necessary with the help of neat sketches.

SECTION—A

1. (a) How do you convert a number in any base system to an equivalent decimal number ? 3

(b) Add the following binary numbers :

(a) 10111·101 + 110111·01

(b) 1010·11 + 1101·10 + 1001·11 + 1111·11. 3

Scanned by CamScanner

(c) Given the logic equation :

$$f = ABC + B\overline{C}D + \overline{A}\overline{B}C$$

(a) Make a truth table.

(b) Simplify using K-map.

(c) Realize f using NAND gates only. 8

2. (a) Find out the 12 bit 2's complement form of the following decimal number (a) –173, (b) –65·5. 4

(b) What are the techniques used for the minimization of Boolean expression ? Explain its drawback. 4

(c) Convert the following :

(i) $(9AB{\cdot}5)_H = (\ ?\ )_D = (\ ?\ )_8$

(ii) $(938{\cdot}62)_O = (\ ?\ )_H = (\ ?\ )_D$. 5

3. (a) Design a combinational ckt for the subtraction of 4 bit binary number using addition. 5

(b) Implement the Boolean function $F = X \oplus Y \oplus Z$ by using 4 : 1 multiplexer. 6

(c) List some applications of multiplexer. 2

4. (a) Design a 6 to 64 line decoder using 3 to 8 line decoder. 6

(b) Design a circuit for a BCD adder and explain short. 7

5. (a) Distinguish between combinational and sequential switching circuits. 4

Scanned by CamScanner

(b) What is meant by state table ? How it can be converted into state diagram ? 4

(c) How a latch can be converted into a flip-flop ? Give any one example. 5

SECTION—B

6. (a) The following serial data are applied to the flip-flop shown in Fig. Determine the resulting serial data that appears on the Q output. There is one clock pulse for each bit time. Assume that Q is initially O. The rightmost bits are applied first :

$J_1 = 10110110$ $J_2 = 11011001$

$K_1 = 10010110$ $K_2 = 11011011$ 3

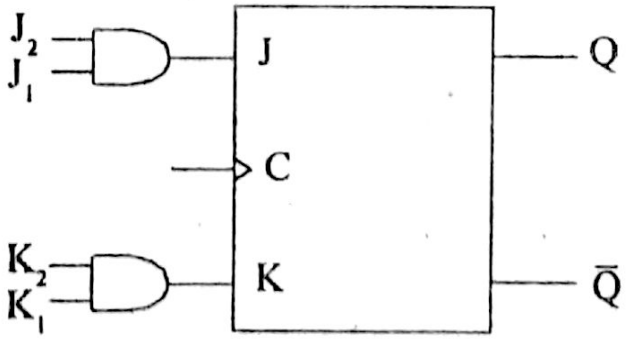

(b) Convert a D flip-flop into a J-K flip-flop. 5

(c) Design a asynchronous MOD-10 up counter. 6

7. (a) Design a synchronous 3 bit Gray-code converter. Use J-K flip-flop. 8

(b) What is race-around condition ? How it can be avoided ? 5

8. (a) Describe various registers which are usually provided in a microprocessor. 6

Scanned by CamScanner

(b) Compare the action of microprocessor 8085 for the following pair of instructions :

(a) LDA 2400H and LHLD 2400H

(b) SUB B and CMP B

(c) JMP 2700H and PCHL

(d) NOP and HLT. 4

(c) Write program to exchange the contents of memory location D000H and D001H. 3

9. (a) What is the significance of ALE in 8085 microprocessor ? 2

(b) Explain, what you understand by interrupts. Discuss enabling, disabling and masking of interrupts. 7

(c) Write a suitable instruction to perform the following task :

(i) to examine the contents of flag register.

(ii) to examine the contents of stack pointer.

(iii) to examine the contents of stack.

(iv) to examine the contents of PC. 4

10. (a) Differentiate between S/W interrupts and H/W interrupts. 4

(b) Write a program to add ten data bytes. Data is stored in memory locations starting from C200H. 6

(c) What are the sequence of steps carried out when CALL and return instruction in 8085 are executed ? 3

Scanned by CamScanner